Venture Capital Meets Hi-Tech

Silicon Valley began in this garage.

U.S. DEPARTMENT OF STATE / BUREAU OF INTERNATIONAL INFORMATION PROGRAMS

Volume 13, Number 5

International Information Programs:

Coordinator	Jeremy F. Curtin
Executive Editor	Jonathan Margolis

Creative Director	George Clack
Editor-in-Chief	Richard W. Huckaby
Managing Editor	Michael Jay Friedman
Production Manager	Susan L. Doner
Assistant Production Manager	Chloe D. Ellis
Web Producer	Janine Perry

Copy Editor	Kathleen Hug
Photo Editor	Ann Monroe Jacobs
Cover Design	Timothy J. Brown
Reference Specialist	Anita N. Green
Copyright Specialist	Yvonne R. Shanks

Cover Photo: The garage in Palo Alto, California, where Hewlett-Packard began. © AP Images

The Bureau of International Information Programs of the U.S. Department of State publishes a monthly electronic journal under the *eJournal USA* logo. These journals examine major issues facing the United States and the international community, as well as U.S. society, values, thought, and institutions.

One new journal is published monthly in English and is followed by versions in French, Portuguese, Russian, and Spanish. Selected editions also appear in Arabic, Chinese, and Persian. Each journal is catalogued by volume and number.

The opinions expressed in the journals do not necessarily reflect the views or policies of the U.S. government. The U.S. Department of State assumes no responsibility for the content and continued accessibility of Internet sites to which the journals link; such responsibility resides solely with the publishers of those sites. Journal articles, photographs, and illustrations may be reproduced and translated outside the United States unless they carry explicit copyright restrictions, in which case permission must be sought from the copyright holders noted in the journal.

The Bureau of International Information Programs maintains current and back issues in several electronic formats, as well as a list of upcoming journals, at *http://www.america.gov/publications/ejournals.html.* Comments are welcome at your local U.S. Embassy or at the editorial offices:

Editor, *eJournal USA*
IIP/PUBJ
U.S. Department of State
301 4th St. S.W.
Washington, DC 20547
United States of America

E-mail: eJournalUSA@state.gov

About This Issue

© AP Images

This humble garage, also pictured on the cover of this issue of *eJournal USA*, may tell us more about the American people than the proud marble monuments that adorn the National Mall in Washington, D.C. In 1938, the garage housed no automobile, but rather the Hewlett-Packard Company, founded by William Hewlett and David Packard with $538 in borrowed capital. The image represents the entrepreneurial zest and individual drive that characterize this nation of achievers, the creativity and practical ingenuity of American entrepreneurs from Benjamin Franklin (bifocals, odometer, lightning rod) to Larry Page and Sergey Brin (Google) who harness the latest technologies to practical — and profitable — uses. Also important is the garage's address: Palo Alto, California, home to Stanford University and a central point in the famous Silicon Valley, nexus of the semiconductor revolution and no doubt of technological marvels to come.

This eJournal explores the phenomenon that drives uncounted Americans — and now citizens of other nations — to create fledgling "start-up" businesses that explore and exploit the latest developments in high technology. It also investigates the closely related "venture capital" phenomenon. New businesses need money, and often lots of it. How investors match their funds to (hopefully) winning ideas is a big part of the start-up story.

How does one start a high-tech business, and how does one fund it? Joseph Bartlett addresses these questions from the vantage point of a venture capital expert. Amity Shlaes explains the policy decisions that encouraged — and at times discouraged — this venture capital system and the innovation it nourishes. Start-up CEO Cheryl Smith explains the process from the business owner's perspective, while Ben Casnocha — named by *BusinessWeek* magazine as one of America's "top young entrepreneurs" — offers words of encouragement to young people to get out there and create businesses of their own. Many high-tech start-ups are founded in that part of northern California we know today as the Silicon Valley. Ashlee Vance explains why. And Richard Florida examines one social consequence of the high-tech revolution: the emergence of a "creative class" that prizes cultural diversity and social tolerance.

Many important start-ups have been founded by immigrant entrepreneurs who arrive in the United States from every corner of the globe. Throughout this eJournal, we profile a number of them.

Venture capitalist Vinod Dham, also known as the father of the Pentium processor, once memorably said: "Living in the Silicon Valley, if you do not do a start-up, then something is wrong with you." That puts the matter a bit starkly, but Dham does capture the essential drive of millions — Americans and others — who even now are hard at work, if only in the garages of their minds.

— The Editors

U.S. DEPARTMENT OF STATE / MAY 2008 / VOLUME 13 / NUMBER 5
http://www.america.gov/publications/ejournals.html

Venture Capital Meets Hi-Tech

4 Venture Capital: A Primer
JOSEPH W. BARTLETT, COUNSEL, SONNENSCHEIN NATH & ROSENTHAL LLP
Venture capitalists apply carefully developed techniques to evaluate start-ups before investing funds.

8 Immigrant Entrepreneur Profile: Asa Kalavade, Indian-Born Co-Founder of Tatara Systems

9 From the Ponderosa to the Googleplex: How Americans Match Money to Ideas
AMITY SHLAES, SENIOR FELLOW IN ECONOMIC HISTORY, THE COUNCIL ON FOREIGN RELATIONS
The development of the venture capital model empowered entrepreneurs to launch a cornucopia of high-tech start-up businesses.

13 Immigrant Entrepreneur Profile: Patrick Lo, Chinese-Born Founder of Netgear

14 Inside the Real World of Venture Capitalists
CHERYL SMITH, CHIEF EXECUTIVE OFFICER, UTILITY.NET
Entrepreneurs must prepare appropriate business plans and negotiate carefully the venture capital system.

18 Immigrant Entrepreneur Profile: Nancy Chang, Taiwanese-Born Co-Founder of Tanox

19 Starting Your Own High-Technology Start-Up
BEN CASNOCHA, AUTHOR, *MY START-UP LIFE*
In an American climate that encourages entrepreneurial initiative, opportunities for young people are immense.

23 Immigrant Entrepreneur Profile: Zvi Or-Bach, Israeli-Born Founder of eASIC

24 **Not Just Semiconductors: Silicon Valley and the Culture of Innovation**
Ashlee Vance, Editor, Online Tech Site The Register
High-tech start-ups flourished in California's Silicon Valley because of the region's culture of innovation and shared information among entrepreneurs.

28 **The Rise of the Creative Class**
Richard Florida, Professor of Business and Creativity, Rotman School of Management, University of Toronto
The growth of high-tech industries has facilitated the emergence of a creative class of young thinkers.

31 **By the Numbers**

32 **Internet Resources**

Venture Capital: A Primer

Joseph W. Bartlett

© AP Images/Richard Drew

Traders on the always-hectic New York Stock Exchange, where free markets appraise public corporations every business day.

A highly specialized venture capital system matches high-tech and other start-up businesses with investors.

Joseph W. Bartlett is counsel in the New York City office of Sonnenschein Nath & Rosenthal LLP. A former U.S. undersecretary of commerce, he is a courtesy professor with the Johnson School of Business, Cornell University, and former adjunct/visiting professor at the Stanford University and New York University law schools. Bartlett is the founder and chairman of VC Experts Inc. and editor-in-chief of The Encyclopedia of Private Equity and Venture Capital. [www.vcexperts.com]

The U.S. economy owes much of its postwar growth to emerging, tech-flavored enterprises, many of which have expanded smartly and contributed significantly to employment, wealth, and innovation — the emblems of our prosperity over the last 50 years. The story of how these small businesses attract the investment, or venture capital, they need first to survive and then to grow draws on a culture that values optimism and risk-taking, farsighted and investment-friendly government policies, and the energy and drive of the individual businessperson.

Because the United States has no monopoly on these traits, it seems likely that the intertwined stories of venture-capital investors and high-tech entrepreneurs increasingly will be a shared, global phenomenon.

Knowing the Terms

The world of venture capital employs a specialized insiders' nomenclature. A new business is a "start-up." Because high-tech giants such as Hewlett-Packard and Apple Computer literally trace their origins to workshops set up in automobile garages, today's start-ups originate in their founder's "garage." Because founders seek fast growth, successful start-ups are sometimes referred to as "gazelles."

A new business is initially built on the founder's hard work, or "sweat equity," plus outside financing from "friends and family," then from "angels" — wealthy individuals whose investments may appear, to the founder at least, as acts of virtue — and culminating in the commitment of capital from professionally managed venture capital funds, often known by the English acronym "VCs." One or more rounds of financing, known as "Series A," "Series B," and so on, can occur at this juncture. The arc of the gazelle as it proceeds from private financing to publicly traded company is often called "the embryo to the IPO" (initial public offering of stock).

Each of these labels, and others not mentioned here, are just that — shorthand for items and phenomena that vary widely in actual practice. I focus here on how gazelles have successfully gestated in the United States.

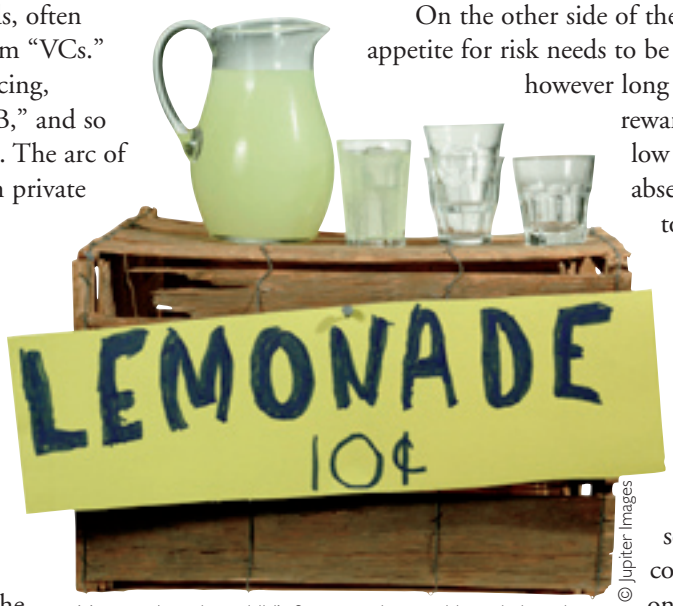

Many an American child's first experience with capital markets: a lemonade stand, venture capital courtesy of Mom and Dad.

© Jupiter Images

The Cultural Imperative

How does a founder, starting in his or her garage, successfully solicit growth capital from the angels and then the VCs? What are the core elements in the process? A start-up's very first assets are the brains, energy, and commitment of its founder. To put it another way, the entrepreneur's character traits are themselves a form of venture capital.

The United States, in this sense, has been particularly blessed with individuals who combine optimism, confidence, and an enormous appetite for risk. After all, the odds suggest that initiating a successful start-up in one's garage (or, as in the case of Apple Computer's Steve Jobs, his *parents'* garage) is not, statistically speaking, a sensible use of time and energy. The failure rate is high. It takes an enormous level of optimism and confidence for the founder to say to herself or himself: "Despite the odds, *I* can make it big time — and have a lot of fun and satisfaction along the way."

A healthy appetite for risk also is central. For this reason, venture capital is unlikely to flourish in societies where cultural norms, government policy, and bureaucratic inertia discourage risk-taking. Venture capital instead requires a proper balance of risk and reward. If the consequences of failure entail not just legal bankruptcy but also personal ruin, the venture capital model will not get off the ground.

On the other side of the coin, the founder's appetite for risk needs to be whetted by the possibility, however long the odds, of sensational rewards; this means, in turn, a low tax environment and the absence of bureaucratic obstacles to entrepreneurial success. It is this possibility of an enormous win that lures American entrepreneurs — not the odds, but the economic and psychological delights when the gamble pays off.

A founder's ability to seize opportunity, act with confidence, and tolerate risk is only the beginning of the story. Crucial, too, is a system of laws and social norms that protect intellectual property; ensure universal public education; afford employers the ability to hire and, more importantly, fire employees as business needs dictate; and guarantee within reasonable legal limits the investor's ability to invest his capital in those ventures he views as promising.

Obtaining Venture Capital

Assuming that adequate investment capital is available, how does the typical U.S. start-up access it on terms that reward fairly both the founder's sweat equity and the investor's risk of capital? Over the years,

© Jupiter Images

It's a deal! But securing venture capital is only one step on the road to a successful start-up business.

Americans have devised structures and processes that shape the bargaining between entrepreneurs and investors and that assure a continued flow of capital to the start-up businesses that need it.

Founders have had to develop the tools and the knowledge to present proposals that allow investors fairly to evaluate a start-up's prospects for success. The investors, in turn, have developed financial terms that afford them a fair opportunity to earn profits competitive with those they might earn on other kinds of investments, adjusted for risk, and without being confiscatory. Financial terms that favor the entrepreneur risk an inability to attract venture capital, while deals too harsh from a founder's perspective deprive the entrepreneur of the incentive to invest his or her sweat equity in the fledgling business.

The long history of negotiations between entrepreneur and investor have produced a relatively clear and well-defined road map of venture capital investment. As one involved during the evolution of this process in the early 1960s, I can testify that trial and error, spread across literally hundreds of thousands of transactions, has produced consensus and standardization of the necessary metrics.

The founder of a start-up typically raises organizational money by maxing out his or her credit cards and taking out a home equity loan. He or she "slow pays" creditors in order to buy time to beta test the product in her garage. If the results are promising, she arranges the friends-and-family round, seeking investments from college roommates, relatives, old friends, and day-job colleagues.

Next, she turns to angels, those financial investors who specialize in providing venture capital for small start-ups and entrepreneurs. The angel round is trickier, but there are organized angel groups around the United States, as well as industry conferences, business plan competitions, venture capital clubs, and other established venues where angels come together and review proposals.

Serial angels, those who already have invested successfully in start-ups, are the most desirable investors, particularly when they can "add value" — business advice, contacts, sales leads, and the like — to the enterprise. Securing angel capital requires a lot of phone calls, a lot of knocking on doors, and a lot of networking. Placement agents frequently can help find the lead, or "bell cow," venture investor. Once a lead investor is in place, it can be easier to attract others.

The process is not an easy one, but certain provisions of U.S. law help it along. American law is friendly to the solicitation of high-net-worth individuals, assuming they possess sufficient net worth. Also, the tax treatment of angel investments can be attractive, with the federal government picking up half the bill in the form of tax deductions.

Structuring the Deal

The road maps outlining the terms of the deal between entrepreneur and venture capital investor also are becoming easier to read. A number of surveys are available to indicate market/industry standard deal terms. Model forms are available from trade groups such as the National Venture Capital Association and from the libraries of the law firms and advisers that routinely practice in this area.

Entrepreneurs understand that venture capital investors expect an average 20 percent internal rate of

© Jupiter Images

Presenting one's business plan effectively is crucial for attracting investors.

return (IRR) compounded on the portfolio as a whole. IRR is the industry benchmark that combines the rate of appreciation of a holding between investment and sale and an assured rate of return on interim distributions. In other words, it measures the investor's return during the five- to seven-year expected time horizon between investment and exit (when the investor sells his investment).

Thus, the start-up founder, when approaching venture capitalists, understands that he or she must be able to present realistic projections that are based typically on actual revenues and that, when adjusted for risk, meet the investor's target internal rate of return. Since early-stage valuations tend to be influenced by VC-perceived trends and herd instinct, many investors rely instead on "pre-money valuations" offered by various score-keeping organizations.

The critical point is that the lessons drawn from legions of transactions have lent efficiency and ease to deal structuring. Unnecessary haggling over relatively trivial issues is less and less prevalent. Based on hard-won experience, investors and entrepreneurs have a fair idea of what they want to give and what they need to take in order to make the process work. When the buy side and the sell side are in alignment, the transaction closes with a minimum of frictional costs and wasted time. The parties can focus on the main variables: the value of the start-up's technology, its competition, the quality of its management, the time horizon to exit, and likely exit pricing. The players contribute collectively to an environment that minimizes eccentric and superfluous risks.

U.S. federal and state governments have contributed to this process by loosening restrictive regulations. The state courts in Delaware, home to many U.S. corporations, have clarified and explained applicable corporate governance rules. Meanwhile, the leading law, accounting, and investment banking firms have worked to standardize deal structure and contract language. The process has been gradual, of course, and cumulative, with success begetting success. At bottom, again one finds the U.S. cultural imperative of optimism, confidence, and risk appetite. These values have spurred both venture capitalists and entrepreneurs to build together an integrated system that serves their collective needs. It has been a mainstay of American economic growth and prosperity.

An Open Horizon

One promising consequence is that over the past several years, students from around the globe have, in my classes and others like them, studied this venture capital phenomenon and taken the lessons back home. The success stories are spreading worldwide, particularly in the "Three I's" — Ireland, India, and Israel.

Competing models based on low-cost labor arbitrage and petroleum wealth will carry an economy only so far. In the final analysis, innovation and technology offer an open horizon and an inexhaustible resource. ■

The opinions expressed in this article do not necessarily reflect the views or policies of the U.S. government.

Immigrant Entrepreneur Profile
Asa Kalavade, Indian-Born Co-Founder of Tatara Systems

Courtesy NVCA

Seventeen years ago, it would be considered improbable for a young woman to found her own technology business in India. "Even when I just started studying engineering, people came to my parents to talk them out of it, never mind starting my own company," said Asa Kalavade. Asa came to America as an international student and received a master's and PhD in electrical engineering and computer science from the University of California at Berkeley.

While most people think of wireless networks and streaming as brand-new technologies, Asa has worked on these technologies for more than 10 years. Early in her career at Bell Labs, Asa invented patent-pending technologies for wireless multimedia streaming, network interfaces, and real-time multiprocessor DSP (digital signal processing) systems. She holds multiple patents.

After serving as vice president of technology at Savos, Asa founded Tatara Systems along with an immigrant from China, Hong Jiang. Based in Acton, Massachusetts, the privately held Tatara Systems employs 60 people. It develops and deploys solutions for communication service providers, helping them to provide converged mobile services to their subscribers. Among Tatara's customers are Vodafone, Telus Mobility, and O2 UK.

Technology and entrepreneurship run in Asa's family. Her two siblings are both in the United States working as electrical engineers. Her Indian-born husband has started his second company, Tizor Systems, a venture-backed company that provides data security for businesses. "We're serial entrepreneurs," said Asa.

> *"Even when I just started studying engineering, people [in India] came to my parents to talk them out of it, never mind starting my own company."*
> *Asa Kalavade*

The opinions expressed in this article do not necessarily reflect the views or policies of the U.S. government.

Note: *This profile originally appeared in the study* American Made: The Impact of Immigrant Entrepreneurs and Professionals on U.S. Competitiveness*, which was commissioned by the National Venture Capital Association and conducted by Stuart Anderson of the National Foundation for American Policy and Michaela Platzer of Content First LLC.*

From the Ponderosa to the Googleplex: How Americans Match Money to Ideas

Amity Shlaes

The development of the venture capital model empowered entrepreneurs to launch a cornucopia of high-tech start-up businesses.

Amity Shlaes, senior fellow in economic history at the Council on Foreign Relations, is author of The Forgotten Man: A New History of the Great Depression *(Harper Perennial). Gaurav Tiwari and May Yang contributed research to this article.*

© AP Images

Actor Lorne Greene portrayed Ben Cartwright, self-reliant exemplar of American values, on the television series *Bonanza*.

Back in 1959, the National Broadcasting Company, an American television network, aired a new series. Entitled *Bonanza*, the hour-long Western represented a technological innovation — it was the first series broadcast in color. The show depicted the Cartwrights, a father and three sons who made a new kind of life ranching at their homestead, the Ponderosa, on Lake Tahoe in Nevada. The Cartwrights were the opposite of salary men. They were pioneers — one son built the family ranch. They lived near a silver boomtown where hard work and sudden luck were transforming the occasional poor man into a wealthy one.

To many Americans, *Bonanza* symbolized the freedom to make one's own life and own money one's own way. The show became enormously popular, not only in the United States but worldwide. By 1969, *Bonanza* was broadcast in 80 foreign markets. President Richard Nixon even expressed grave concern about pre-empting the show for a crucial policy speech. Other Westerns such as *Wagon Train, Gunsmoke*, and *Rawhide* also found large viewerships.

The great popularity of the self-reliant Cartwrights and their counterparts on the other popular TV Westerns affords a key insight into post-World War II American culture. While standard histories of the period from 1945 rightly stress the Korean War, Vietnam, President Lyndon B. Johnson's Great Society social programs, and the triumphs of the civil rights movement, they often fail to capture another important development: the arrival of financial techniques that helped to release and leverage Americans' already robust creative and entrepreneurial energies. Even in the 1960s, often viewed as a period of social revolution, something we might call Bonanza America was moving forward. This was the America of the business start-up and of what we now call venture capital.

Starting a new business was not on most Americans' minds as the country demobilized after World War II. One reason was that it did not seem possible because of the lack of access to capital. In those days there were only three places one could find cash to fund a new business plan: the government; big companies; or perhaps, if one were lucky, a bank. During the early 1950s, government loomed the largest. Defense spending averaged a full 11 percent of gross domestic product, about three times today's share. Capital was in any case something people associated with the pinstripe-suited Establishment, not

cowboys. Memories of the 1929 stock market crash and the Great Depression that followed were still fresh. Americans feared a repeat. If young professionals wanted to work in the new field of computers, they did not start a new company in their parents' garage. They tried for a job at IBM's Poughkeepsie, New York, research center, possibly to work on the 650 Magnetic Drum Calculator.

But even those on Wall Street or in the big companies wondered whether the nation's financial system was too conservative. They understood that the traditional three capital sources could not make the nation grow fast enough, especially in peacetime. What's more, they understood that when Wall Street financiers or Defense Department technocrats selected among competing applied research projects, they often backed the wrong ones. Finally, they recognized the most important thing — the incentives to launch a start-up were too weak. Why devote so much of one's time and energy to a fledgling business when one likely would earn more as an IBM "Organization Man"? Talented men and women, it came to be understood, would work more creatively and with greater entrepreneurial zeal when they stood to reap a commensurate reward — their own bonanza.

The Dream Factory of Georges Doriot

A key figure in the story was a French-American named Georges Doriot. Doriot was himself an Establishment figure: A Harvard Business School professor, he joined the wartime army, rose to head the Quartermaster Corps' Military Planning Division, and was appointed a brigadier general in recognition of the high quality of the military research effort he led. Afterward, Massachusetts Investor Trust Chairman Merrill Griswold, Massachusetts Institute of Technology President Karl Compton, and various politicians handpicked Doriot to head American Research and Development (ARD), a new firm that would invest in precisely those small, innovative companies that had been underserved by traditional capital markets.

Doriot explained to his students — and the world — that a more effective means of financing entrepreneurial start-ups was needed, one that matched venture capital to promising new ideas. In this system, the investor does not lend money to a start-up. Instead he buys a share of the new company — and then, at least sometimes, helps to manage it. Failure often results. But if the company succeeds, the returns for the investor can be enormous.

© Bettmann/Corbis

Georges Frederic Doriot (1899-1987) led the first publicly traded venture capital concern in the United States and was instrumental in the development of modern venture capital practices.

As his biographer Spencer E. Ante notes, Doriot started out relying on traditional sources of capital. ARD became a public company in which shareholders could buy stock. But Doriot also held a number of untraditional views. He understood that incentives were important to innovators and investors alike, and that classical business hierarchies might dampen those incentives. Better to devise methods of giving more people a stake in the start-up's success. He liked the idea of ARD colleagues personally owning shares in companies that ARD invested in. He liked the idea of pouring more capital into a start-up when he felt like it. His suits were as far away from the cowboys' denim jeans as you could get. But like cowboys, Doriot liked freedom.

When a Navy veteran and engineer named Ken Olsen decided that computers smaller and cheaper than IBM's mainframes might represent the future, traditional lenders turned down his request for cash. Doriot and ARD stepped in, and Digital Equipment Corporation was born.

© AP Images/Paul Sakuma

Intel Corporation co-founder Gordon Moore, center, and former CEO Craig Barrett, right, appraise an Intel Museum exhibit about co-founder Robert Noyce.

So were scores of other high-tech start-up companies. ARD became known as Doriot's Dream Factory. His inspiration and energy helped create the now famous technology parks and companies outside Boston along the (Route) "128 Corridor."

The financial returns were enormous. An original $70,000 stake in Digital Equipment grew to hundreds of millions of dollars. But ARD's success did not transcend the underlying competition between the public- and the private-sector models. As a publicly traded company, ARD was regulated by the U.S. Securities and Exchange Commission. SEC regulations made it hard for Doriot to put extra capital into his portfolio companies. The commission repeatedly opposed ARD's allowing its employees to hold stock options in companies ARD invested in. The regulators could not see what Doriot saw — that those options were crucial incentives. A bitter Doriot learned a lesson that many venture capitalists then internalized — there is a cost to going public. Sometimes it is just better to stay private — on your own ranch, as it were. "While the SEC believes it is protecting our stockholders, they are actually suffering," Doriot fumed.

Innovaton: Boosts and Backsteps

It took the 1957 launch of *Sputnik*, the Soviet satellite, to break the policy logjam. Fearing that *Sputnik* signaled a U.S. inability to compete with the Soviet Union in technological innovation, President Dwight D. Eisenhower introduced and signed the Small Business Investment Act. This law allowed small companies to borrow from the government at a favorable rate — if they agreed to rigorous terms. The law did not yield many inventions, but it did send a crucial signal that government would be friendly to private start-ups.

Meanwhile there were other innovators and also young venture capitalists who, like Doriot, had trouble with traditional management. They were stepping forward to make their own visions real. Among the technical whizzes were eight brilliant engineers who worked for William Shockley at his Shockley Semiconductor Corporation. Shockley was a classic company head, demanding and hierarchical. Backed by private venture capital, the eight quit Shockley and founded Fairchild Semiconductor, a signal moment in the emergence of California's "Silicon Valley." There, Robert Noyce, Gordon Moore, and others invented the "integrated circuit" that is the basis of all computers today.

In time, a number of Fairchild employees attracted private venture capital and split off to found their own high-tech businesses. Intel Corporation, whose processors power so many of today's personal computers, is just one of these "Fairchildren." When we hear today about a West Coast company where no one is boss and where as many employees as possible get stock options, we think of Microsoft. But it was actually the Fairchildren who pioneered this format — and Silicon Valley as well.

The boundaries between the public and private sectors continued at times to impede the progress of the venture capital model. For example, federal spending on research at universities was enormous, but the research tended to stay on the shelf. Part of the trouble was that no one could confidently launch businesses based on ideas from such research, since the ownership of the ideas was unclear — the ideas might legally still belong to the federal government.

Congress laid another obstacle in the path of investors when in 1969 it increased the capital gains tax to 50 percent from 25 percent. The clear message that they might keep only half of the profit from their ideas

daunted inventors. From 1971, new patents decreased each year. At some point in the 1970s, the staff of Senator Birch Bayh, a Democrat from Indiana, found that there were some 28,000 patented ideas languishing at the U.S. Patent and Trademark Office, with only 4 percent of that figure finding commercial application. People wondered whether the frontier period of American enterprise was passing. Even television seemed to confirm this: *Bonanza* itself lost viewers and was cancelled.

Bonanza Comes Back

In 1978, a concerned Republican congressman from Wisconsin, William Steiger, produced a plan that effectively cut the capital gains tax to the 28 percent level. This made it more worthwhile to develop commercial applications for patents. Another significant policy change occurred in 1979, when the U.S. Department of Labor changed its rules to permit pension fund managers to invest as venture capitalists in riskier firms.

In 1980, Bayh and his fellow senator, Robert Dole, a Republican from Kansas, led passage of the Bayh-Dole Act. It allowed universities and small companies, within certain limits, to keep as their own intellectual property innovations funded by government research. Sure of a share in the profits, the research world now had an incentive to find practical uses for its inventions.

Venture capital activity immediately and dramatically increased. In the first half of the 1970s, there were only 847 venture capital investments nationwide. That increased to 1,253 in the period 1975-1979, and to 5,365 in 1980-1984. These figures represented a sevenfold increase in cash investment. Apple Computer was one of the start-ups that received a timely infusion of venture capital.

This rough roster of policy changes may be dry and legalistic — how many who wonder at the success of Andrew Grove at Intel or of Howard Schultz at Starbucks have heard of Bayh-Dole or Doriot? But the new laws facilitated the emergence not only of Silicon Valley and the Route 128 Corridor, but also a general culture of innovation. Today the Lake Tahoe where *Bonanza* was set routinely hosts conferences of venture capital firms. Those who had feared a tamer future for the United States after World War II would have been pleasantly surprised: The cowboy was still there after all. ■

The opinions expressed in this article do not necessarily reflect the views or policies of the U.S. government.

© AP Images/Jeff Chiu

Apple CEO Steve Jobs displays his company's latest creation, the MacBook Air computer, in January 2008.

Immigrant Entrepreneur Profile
Patrick Lo, Chinese-Born Founder of Netgear

Courtesy Media Relations for NETGEAR

Sometimes one must take chances to secure a better life for your family. That is a lesson Patrick Lo learned when his parents decided to escape China and Mao's Cultural Revolution in the 1960s. Separating to increase their odds of success, Patrick made it out with an aunt to Macao. However, his parents were captured and sent to a re-education camp until Mao died in 1975.

Living with his grandparents in Hong Kong, Patrick managed to win a full scholarship, reserved for students from developing nations, to attend Brown University in Rhode Island. To secure the $400 needed for the plane ticket to the United States, he held a fundraiser, which he describes as his first experience in raising capital. After paying for the cab ride, he had only $170 to his name upon arriving in America.

> *"If I stayed in Hong Kong, I would have ended up fixing radios. It was America's culture that encouraged me to be ambitious."*
> *Patrick Lo*

Patrick received a bachelor of science degree in electrical engineering from Brown, but later returned to Hong Kong to seek employment. Hewlett-Packard hired him in its Asia office and eventually transferred him to Silicon Valley. He later started working for Bay Networks, which allowed him to establish Netgear as an "independent company-within-a-company, with separate budgets and personnel." Netgear's focus was computer networking for homes and small and medium-sized businesses. When Nortel purchased Bay Networks, it expressed little interest in Netgear. Patrick raised sufficient funds to purchase Netgear.

By 2003, Netgear had shown a sufficient track record of profitability that Patrick could take the company public. Today, the company, based in Santa Clara, California, employs more than 300 people. One of Netgear's home networking devices, which can be plugged into any home wall socket, has been favorably reviewed in the *Wall Street Journal* and other publications.

"If I stayed in Hong Kong, I would have ended up fixing radios," said Patrick Lo. "It was America's culture that encouraged me to be ambitious."

The opinions expressed in this article do not necessarily reflect the views or policies of the U.S. government.

Note: *This profile originally appeared in the study* American Made: The Impact of Immigrant Entrepreneurs and Professionals on U.S. Competitiveness, *which was commissioned by the National Venture Capital Association and conducted by Stuart Anderson of the National Foundation for American Policy and Michaela Platzer of Content First LLC.*

Inside the Real World of Venture Capitalists

Cheryl Smith

Courtesy Cheryl Smith

After holding senior executive positions at three of America's largest corporations, Cheryl Smith is now chief executive officer of utility.net, a high-tech start-up company.

A successful entrepreneur learns that navigating the venture capital system requires more than a good business idea.

Cheryl Smith has been the chief executive officer of the start-up company utility.net since April 2006. Previously, she spent more than 25 years as an information technology professional and as a senior executive at McKesson, KeySpan, and Verizon, three of America's largest corporations in health care, energy, and telecommunications.

Two years ago a good, trusted friend, a lawyer, came to me with a technology patent that his firm had become involved with. The patented technology provides high-speed Internet access (broadband) to homes and businesses over electric power lines. Some 50 percent of American homes and small businesses, mostly in rural areas, do NOT have high-speed, low-cost Internet access, but nearly all are wired for electricity.

The basic idea looked like a win-win situation for everyone: underserved consumers; the utility companies whose lines we would pay to use; and, not least, the entrepreneurs and venture capital investors whom the financial model suggested would reap great returns within three years. My friend asked if I would consider being the chief executive officer of the start-up company that would take this technology worldwide.

I was then the chief information officer of McKesson, a San Francisco-based health care services company that is one of the 20 largest corporations in the United States. I managed an annual budget of $500 million. Thousands of people reported to me. I had led two successful start-up subsidiaries within companies where I'd been a senior executive. I'd been a "techie" for 25 years and considered myself very, very good at it. But should I take the risk of leaving McKesson to head a completely independent start-up?

The first step was to do the appropriate "due diligence" research for the project. This meant:

- Verifying the technology (making sure that it would work as advertised),
- Verifying the patent (making sure that nobody else had patented the technology),
- Verifying the market (making sure there was a niche and need that would allow the technology to make money),
- And finally, looking into whether we could put the right people in place to bring this to fruition.

I concluded that the risks were low and the potential upside huge. How difficult could it be? I decided to leave the world of large corporations for that of the fledgling start-up.

What I have learned over the past two years of pursuing venture capital for this project could fill a book. I've kept a journal along the way, listing dozens of major things that I wish I had known but somehow had to learn the hard way. In the paragraphs that follow, I share my "Top Five."

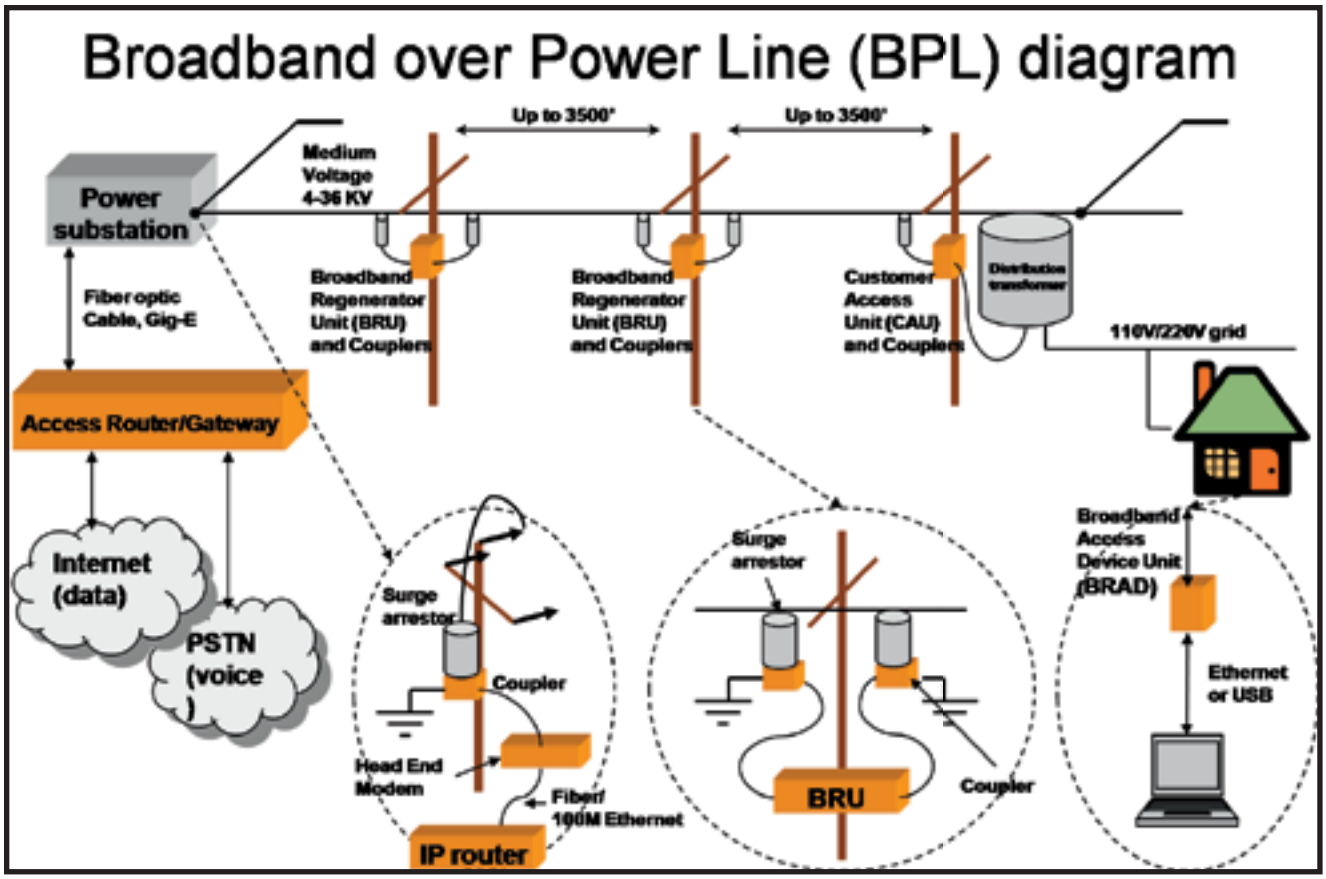

Courtesy Cheryl Smith

Anatomy of an idea: utility.net hopes to bring the Internet to consumers through their power lines. (This chart is an example of a document presented to potential funders.)

It Takes Money

A start-up requires more than technology that works, a need in the marketplace, solid patents or patentable ideas, excellent partners, the absolute right team, strong management experience, commitment, passion, and lots of hard work. It takes money. Make sure that you have enough before, or shortly after, you begin.

The excitement at the beginning of a new venture is palpable. All involved are eager to get to work bringing their vision to reality. But money is essential, and getting it requires well thought out and properly drafted documents. This means ownership agreements with the original funders, corporate operating agreements, and employment agreements. Sweat the details here — or they will come back to haunt you.

Do not allow anyone but the chief executive officer and the chief financial officer — not even an initial venture capital (VC) company that might provide seed money while you approach major investors — to have access to company bank accounts. This is not the time to be a nice, trusting person. This is the time to make sure that you are aware of every dollar in those accounts and how each dollar is being spent.

Make sure that you have at least one year of funding in hand when you begin. If you don't have it, you, first, will not be able to attract a good team, and, second, shouldn't quit your "real" job to take on the venture.

Choose Your Investment Banker Carefully

Your investment banking firm (IB) is the crucial connection to the venture capitalists who can supply the major funding your project requires. Begin looking for a qualified IB as soon as your operations begin.

Once you have one, give the firm a month to help you prepare the presentation you'll make to the venture capitalists, and then 90 days to work its network in search of money. Your investment banker's job is to get a venture capital firm's written "term sheet" spelling out the terms

"I call my invention 'The Wheel', but so far I've been unable to attract any venture capital."

on which the VC will fund your project. The goal is to obtain funds to develop the business sufficiently to make an initial public offering (IPO) of stock to the public, also known as going public. A venture capital firm will typically demand at least 51 percent ownership of the company that results, and your IB will ask for 8 percent of the VC's investment and an option for 3 percent of the company. Of course these terms are highly negotiable, so negotiate them!

If it takes your investment banker longer than 90 days to get a term sheet, find a new IB — or think seriously about whether your project should go forward. By this time you will be about six months into your (typical) one year of initial funding. You will have time to work with one or, at best, two more IBs. Even though the excitement is still likely high and the commitment strong, do not invest your own money — or that of friends and family — as interim funding until you have a signed commitment for sufficient venture capital funding.

While an investment banking firm may tell you that the venture capitalists are looking for "skin in the game" (cash from you), your time and intellect already represent a tremendous personal investment. If you don't have a written term sheet by this time, remember that business is business. The market simply may not share your assessment of your project's prospects for success. This is not the time to increase your personal financial commitment.

Tell Investors What They Want to Hear

A first-hand understanding of the financial world is mandatory. The only parts of your presentation that the financial community really cares about are your financial models. Make sure that you have personally built them and that you truly understand your numbers. And be prepared to calculate answers to questions on the fly.

I thought my Wall Street experience afforded me a real understanding of the financial services world. But the venture capital world is different. Some VC firms work with companies still in the research and development stage; others like companies that are past R&D but have not yet generated revenue; and still others invest only in revenue-generating companies. In addition, many venture capitalists typically specialize — in energy start-ups or in telecommunications, Internet technology, health care, manufacturing, or retail.

So, first, find an investment banking firm that has a proven track record of raising capital from the appropriate venture capital community. Second, invest most of your time presenting only to VCs with a solid track record of investing in your type of start-up.

When all of these connections come together, you will easily know within 90 days whether you have traction with the right IB and whether VCs are seriously interested in your business. Keep watching your bank account — it tells you how much time you have left.

When presenting to venture capitalists, tell them what they want to hear, not what you want to tell them. That seems obvious, but it's hard to do. Everyone loves to talk about their company, their technology, their business value proposition, their management team, their partners. While these things can be interesting to VCs, many assume that you have "great" everything, that you have done your homework. So the only thing that the VCs want to hear about in any detail is the financial model. How much do you need? What is their return on investment? How long will it take? Why so long to the payoff?

We live in a world where the financial community wants to minimize risk and recoup its investment as quickly as possible. The term "venture capitalist" today is a

misnomer. These firms are now publicly owned and must show quarterly results, just like any major corporation. A number of VCs have shared with me their rule of thumb: They double the costs that you present, which typically doubles the return-on-investment time and substantially reduces the return. Even an honest, rock-solid cost model does not help. Unless the venture capitalists know you personally, they will "work" your model themselves. And it won't look nearly as promising.

I have two suggestions for presenting to a venture capitalist "cold" — that is, presenting to a group that you don't know personally:

- Make sure that you have proven all aspects of your model, both cost and revenue, before presenting — a hint as to how to spend your initial first-year dollars.
- Present a model that is extremely optimistic. This is a bit risky during the due diligence phase, but it may help you to live to fight another day.

Whom Do You Know?

Today's venture capital process is in my view staid and archaic. If you aren't already connected in the VC world, find those investment bankers who will help you think outside the box. Better yet, find someone who is connected and trusts you well enough to get involved. Cold-call presentations are almost always a waste of your team's time and money.

Any credible IB will teach you all about today's venture capital process. My suggestion is to listen carefully, then go with your instincts. Better yet, get advice from someone who has already successfully raised venture capital in your industry. The process — "writing the book," having your IB contact its network, holding preliminary teleconference calls with potential VCs, making personal presentations, and then leaving follow-up contacts to your IB — is fairly standard.

But it really comes down to who knows whom. Or more precisely, who *trusts* whom. After making 64 official presentations to venture capitalists, I have determined that funding is NOT based on any "book," phone call, presentation, or deeply rational process.

Know Your Competitors

Understand from the very first your key competitors' business value proposition. Think, without passion, about who your competitors actually are, their business approach, and the value they bring to the industry.

Don't believe your competitors' public descriptions of their business value proposition. *Know* it. One of my favorite expressions today is, "Do you *think* that or do you *know* that?" If you compete in an industry business, you will know your competitor's true business strategy.

If that competitor has been in the business longer than you or has already raised funding, learn from him or her. Do not assume that your strategy necessarily is better. You may have to seriously rethink your ideas.

Listen — and learn something new every day. Then incorporate it into your business plans. Focus is good, but business strategy that anticipates the market is better. Follow your intuition and act on it quickly. Every decision that you and your team make is irrevocable and has long-term impact. So make decisions carefully and with everyone's input. College basketball coach John Wooden said it best: "Be quick but don't hurry."

There are few higher highs or lower lows than working in a start-up. No executive position that I've held with major corporations can match the excitement, challenge, or fulfillment that I've experienced in the past two years. But knowing at the beginning a few start-up secrets would have made all the difference in the world! ■

The opinions expressed in this article do not necessarily reflect the views or policies of the U.S. government.

Editor's Note: *As we go to press, the utility.net venture that Cheryl Smith heads is on its third round of funding and is pursuing two new funding opportunities: one with an Asian consortium that is looking to expand into the United States, and the other with a national telecommunications company. Both funding possibilities have required utility.net to modify its original business strategy.*

Immigrant Entrepreneur Profile
Nancy Chang, Taiwanese-Born Co-Founder of Tanox

Courtesy NVCA

"If you really believe in something, the best approach is to invest yourself in that idea," said Nancy Chang, co-founder of Tanox, a biotechnology company based in Houston, Texas, with almost 200 employees and nearly $45 million in revenue last year.

Not many people take undergraduate classes from one professor who is a future Nobel Prize winner (Yuan T. Lee) and another who would go on to become the nation's prime minister. Nancy says her good fortune to learn under these inspiring teachers gave her the courage to leave Taiwan and study at Brown in 1974, barely able to speak English. On the plane ride to the United States, she read James Watson's book on the discovery of the double helix, which led to changing her academic focus to biology, even though she had never taken a course on the subject.

The following year, Nancy became one of the first international students to attend Harvard Medical School and later, she was told, became the medical school's first major entrepreneur. After Harvard, she was hired at Hoffman-La Roche on a work visa and later became director of the molecular biology group for Centocor. She also has taught at the Baylor College of Medicine and holds seven patents.

> *"I came to the United States frightened and scared. But I found if you do well and if you have a dream, you will find people in America willing to help and give you an opportunity. I just love this country."*
>
> *Nancy Chang*

In 1986, Nancy co-founded Tanox and served as chief executive officer from 1990 to 2006. Starting Tanox was "part passion and dream and went against the textbook" by developing an asthma drug that focused on the allergy-related basis of asthma. At the time, this ran counter to the central belief in how asthma operated. The perseverance paid off when in June 2003, the U.S. Food and Drug Administration (FDA) approved Xolair, the first biotech product cleared for treating those with asthma related to allergies. Xolair was developed under an agreement among Tanox, Inc., Genentech, Inc., and Novartis Pharma AG.

When Tanox went public in April 2000, it raised $244 million, which at the time was the largest biotech initial public offering.

Currently, Tanox is developing TNX-355, an antibody for the treatment of HIV/AIDS. The company is in discussions with the FDA regarding clinical trials. Nancy, who is now chairman of Tanox's board of directors, said she is passionate about AIDS, since as a young researcher she worked in one of the first laboratories to confront the disease.

"I came to the United States frightened and scared. But I found if you do well and if you have a dream, you will find people in America willing to help and give you an opportunity," said Nancy. "Life is very rich. I just love this country."

The opinions expressed in this article do not necessarily reflect the views or policies of the U.S. government.

Note: *This profile originally appeared in the study* American Made: The Impact of Immigrant Entrepreneurs and Professionals on U.S. Competitiveness*, which was commissioned by the National Venture Capital Association and conducted by Stuart Anderson of the National Foundation for American Policy and Michaela Platzer of Content First LLC.*

Starting Your Own High-Technology Start-Up

Ben Casnocha

Courtesy Ben Casnocha

It's never too soon to start: *BusinessWeek* magazine named Ben Casnocha one of American's top young entrepreneurs.

American government policies and cultural attitudes contribute to a climate of entrepreneurial initiative and an acceptance of failure as an inevitable price of future success. The opportunities, especially for the young, are immense.

Ben Casnocha is author of the book My Start-Up Life: What a (Very) Young CEO Learned on His Journey Through Silicon Valley. BusinessWeek *magazine included Casnocha among America's top young entrepreneurs, and the PoliticsOnline Web site named him one of the most influential people in the world of the Internet and politics. Casnocha writes a blog at* http://ben.casnocha.com.

In junior high school, I had a technology teacher who forced me to memorize the text of an Apple Computer television advertisement titled "Think Different." The last line of the ad said: "The people who are crazy enough to think they can change the world are the ones who do." I found this message and its ambassador (my teacher) inspiring. It made me want to start a company to change the world.

But what type of company? I needed a good idea. Around the time I memorized the advertisement, I attended a professional football game in San Francisco. The seats at the stadium were dirty. I wanted to complain about them to the city of San Francisco. When I tried to register my complaint, I discovered that the city had no organized method to handle citizen contacts. In my frustration, I said to myself, "There's got to be a better way!"

This personal experience led me to start a high-tech company that would solve the problem I had stumbled on. I founded my company, Comcate, in 2001 with the aim of improving local government customer

© AP Images/Aijaz Rahi

High-tech entrepreneurs thrive in much of the world. Entrepreneurship Week India was celebrated in 25 Indian cities, including Bangalore, where Biocon Limited Chairman and Managing Director Kiran Mazumdar Shaw delivered the keynote address.

service. I developed software that allows cities to track, manage, and resolve citizen complaints. For example, our local government clients can efficiently track a citizen complaint about a pothole, a broken streetlight, a fallen tree limb, and similar problems. Not only does this lead to more satisfied citizens, but automating the tracking of tasks saves government money. I have spent several years growing this business.

The Typical and the Atypical

In some ways, my entrepreneurial journey has been typical. First, my idea came from a personal experience. Good ideas are almost always informed by first-hand experience more than brainstorming sessions inside an office building.

Second, I've endured successes *and* failures. Starting a company is called a "roller coaster" for good reason: There is much uncertainty, and each day brings its share of highs and lows, good luck and bad. Hiring the wrong employee for my company was one of my most memorable failures. My inability to judge someone's potential fit with the company resulted in lost time and money. The best entrepreneurs have the emotional resilience to thrive in these chaotic situations.

Third, networking — constantly meeting new people — was and is a big part of every day. Each day I spend an hour thinking about who I know and how to stay in touch with these people. And who else I want to meet. Maybe these are sales leads, maybe just personal mentors. Either way, networking has been important to my personal and professional success.

In other ways, my experience has not been so typical. I am young. I started my company at age 14. I'm 20 years old now. I have had to overcome challenges related to my age. I needed to convince people to take me seriously and to ignore the naysayers. I needed to learn the practical aspects of business — how to define a problem, design a solution, build a prototype, and sell it — largely on my own. With few professional contacts, I needed to establish a network of advisers and supporters. And I had a work-life-balance challenge: going to school and growing my company at the same time.

My youth may have also worked to my advantage. Sometimes *not* knowing many things can help, since you ask the "dumb questions." My lack of experience meant I had fewer biases and could approach a problem with fresh eyes.

U.S. Policy and Culture

Fortunately, when pondering my business idea as a kid, I was growing up in the United States, a nation that offers many benefits to entrepreneurs in terms of both official government policies and an overarching culture of entrepreneurship.

The U.S. government makes it easy to start a company. There is little paperwork to complete. There is a fundamental belief in the United States that private business entrepreneurs should be afforded maximum freedom to do what they need to do to grow their business. Onerous government regulation and paperwork can stifle an entrepreneur's creativity, and thus should

be avoided. In this spirit, the government offers tax benefits to small-business owners and funds educational programs. The government believes in the power of private enterprise.

Other than providing such emergency services as police and fire protection, U.S. policy generally favors competition in an open market rather than a nationalized equivalent. Our country, then, welcomes new entrants, even young entrepreneurs.

America's cultural *attitudes* are even more important to its entrepreneurial success. In the United States, if you have the courage to start a business, you are celebrated and you are encouraged. You are seen as an innovator, a pioneer, a successful rebel. If you fail — and there's a good chance you will if you start your own business — most Americans will shrug it off as a learning opportunity. There's no shame in failing. Families, schools, and the media alike share this acceptance of failure.

In one sense, in the United States you have a permanent fresh start. Youth, in particular, are seen as beacons of innovation and creativity. As an aspiring young entrepreneur, I benefited from these attitudes. I became proud of my individuality and pursued my ideas without embarrassment.

© AP Images/The Plain Dealer, James A. Ross

Microchip manufacturing at the Cleveland, Ohio, Microsystems Academy, founded by young students who help start-ups locate manufacturing equipment they can rent.

No One "Right" Approach

The countries that promote entrepreneurship tend to be more economically successful. Economist William Baumol has called entrepreneurship the "indispensable component" of economic growth and prosperity in the United States. With more than 16 million people employed by businesses with fewer than 10 employees, the United States truly does run on small businesses.

But the United States is not the only place that recognizes the economic importance of entrepreneurship. China, India, and other nations also emphasize the importance of small business and are prospering as a result. The approach of the entrepreneurs themselves in each of these countries may vary. There is no one right path to entrepreneurial success. Rather, it's up to the individual — you.

In the United States, the most successful entrepreneurs look different. Google, one of America's powerhouse technology companies, was co-founded by a brainy Russian immigrant, Sergey Brin, who did not care much for media attention. He earned a PhD in computer science at a top university. He studied how mathematical formulas could improve search engine results. Oracle, another powerhouse technology company, was founded by a college dropout who grew his company with aggressive sales strategies. He has become a media celebrity. All successful American entrepreneurs don't look or act like real estate mogul Donald Trump; in fact, few do. Instead, successful business owners find the right path for *themselves*.

More and more people *are* finding a path and are finding the entrepreneurial spirit within themselves. Indeed, in the United States, we are experiencing a golden age of entrepreneurship. Particularly among young people — my generation — the prospect of starting your own venture has never seemed more exciting. A majority of college graduates today indicate on surveys that they plan at some point to start their own business.

The Time Is Now

This fervor to control one's destiny isn't limited to Americans: All over the world, people young and old are realizing the joys of creating a new business. Even if you live in an area that is not traditionally as democratic as the United States, or is not as tolerant of failure or experimentation, or has not yet established mature private capital markets, there has still never been a better time to start. The Internet has made your physical location less important. From Zambia to New Zealand, Canada to Costa Rica, you can log on to the Internet and teach yourself and connect with like-minded souls. In most cases, the entrepreneurial path begins by opening a Web browser.

So join the global entrepreneurial community. Start your own high-technology start-up. Share your lessons and experiences. Share your story. Worst case, you fail. Best case, you change the world, solve someone's problem, maybe make a lot of money. What are you waiting for? ■

The opinions expressed in this article do not necessarily reflect the views or policies of the U.S. government.

Immigrant Entrepreneur Profile
Zvi Or-Bach, Israeli-Born Founder of eASIC

Courtesy Zvi Or-Bach

Israeli-born Zvi Or-Bach came to America in 1981 on an H-1 visa, the precursor to the H-1B (work) visa. After working at Honeywell for two years, he returned to Israel. His brief work experience in the United States convinced him that some day he could return and find niches in the U.S. marketplace. And that was what Zvi did.

In 1990, he started Chip Express, an 80-person company with a patented laser technology useful in producing prototypes of chips within 24 hours. Like many other immigrant entrepreneurs, Zvi went on to start another company, eASIC, based in Santa Clara, California. The privately held company, founded in 1999, uses a combination of chips and software to enable end customers, such as providers of consumer electronics, to introduce custom products into the marketplace quickly and cheaply.

The company's chief executive officer, Ronnie Vasishta, born in England, came to America to work at LSI Logic. After several years, venture capitalist Vinod Khosla of Kleiner Perkins Caulfield & Byers, a key investor in eASIC, recruited Ronnie to run eASIC. "I came to America as a single guy, and it's very daunting," said Ronnie. "It's a very daunting prospect to come to a different country and start from scratch. But one thing it really does for you — it's invigorating. Because you really feel like you have no safety net." Ronnie says at some point it was inevitable that he would come to America. "Do I stagnate in another part of the world or do I come here? The United States does that. The ambitious people are drawn here."

> *"Having worked in the United States for the last 20 years, it's clear that immigration is vital to the growth of the United States and being competitive internationally. There's no question immigration is America's secret weapon."*
>
> *Zvi Or-Bach*

Zvi Or-Bach, who holds more than 30 patents, primarily in the field of semi-custom chip architectures, helped eASIC survive its start-up phase by spreading its workforce among the United States, Malaysia, and Romania. The core of the company resides in the United States, but his experience and contacts from Chip Express helped establish eASIC's multinational design and production capabilities.

Zvi is concerned that current immigration policies are harming his adopted country. "It's painful to see. Because of immigration restrictions, such as on H-1B visas, we're losing many great minds," said Zvi. "Having worked in the United States for the last 20 years, it's clear that immigration is vital to the growth of the United States and being competitive internationally. There's no question immigration is America's secret weapon."

The opinions expressed in this article do not necessarily reflect the views or policies of the U.S. government.

Note: *This profile originally appeared in the study* American Made: The Impact of Immigrant Entrepreneurs and Professionals on U.S. Competitiveness, *which was commissioned by the National Venture Capital Association and conducted by Stuart Anderson of the National Foundation for American Policy and Michaela Platzer of Content First LLC.*

Not Just Semiconductors: Silicon Valley and the Culture of Innovation

Ashlee Vance

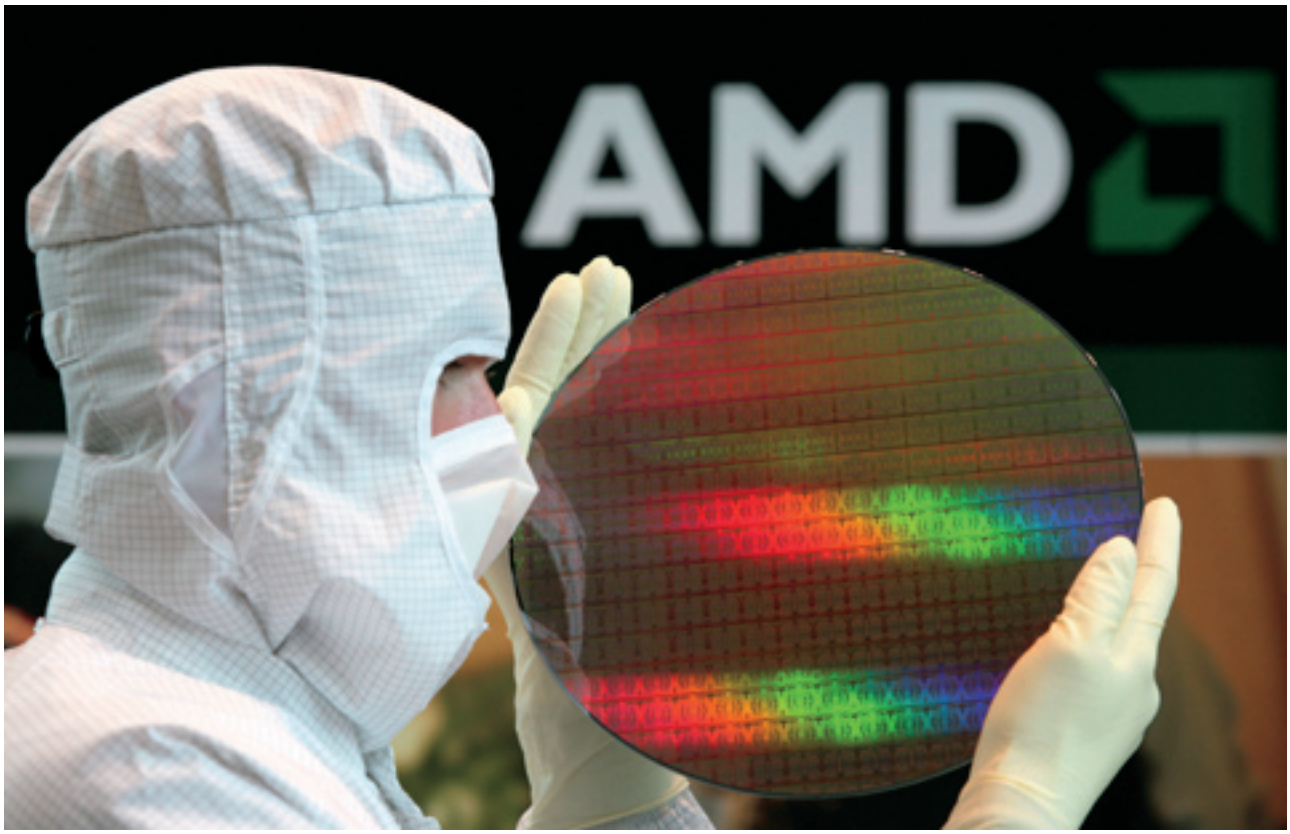

© AP Images/Matthias Rietschel

A "Fairchildren" start-up founded by Fairchild Semiconductor alumni, Advanced Micro Devices Corporation (AMD) fabricates microprocessors at facilities including one in Dresden, Germany, where a technician displays a 300-millimeter silicon wafer.

The success of northern California's Silicon Valley region is not the product of chance, but rather of historical developments that incubated a culture of innovation and shared information among entrepreneurs.

Ashlee Vance is the author of Geek Silicon Valley*, a cultural and historical guide to the region. He is also editor of the online tech site The Register and a frequent contributor to the* Economist *and the* New York Times.

Anyone familiar with the intricacies and historical oddities behind Silicon Valley's rise to technological preeminence will understand the enormous task faced by those who seek to mimic its success elsewhere in the United States and abroad. A number of civic leaders and corporations appear to have decided that combining the "right" mix of capital, university support, talent, and business acumen will result in a competent Silicon Valley clone. This is understandable, but it undervalues the cultural forces that placed Silicon Valley at the epicenter of the world's high-tech industry.

Travel back to 1950, and you would not likely have identified the set of interlocking suburbs about 65 kilometers south of San Francisco as the future capital of computer technology. Back then, locals called it the Valley of Heart's Delight. Without a silicon wafer to be found, pear, cherry, peach, and other fruit orchards dominated

© AP Images/Randi Lynn Beach

Google co-founders Larry Page, left, and Sergey Brin rest on beanbags at their company's Mountain View, California, headquarters.

the mid-peninsula area encased between the San Francisco Bay and the Santa Cruz Mountains.

Many historians point to William Shockley's 1956 return from the East Coast as the trigger for this transformation from lush farmlands to business parks, strip malls, and corporate campuses. Shockley, credited as a co-inventor of the transistor in 1947 (he was then with Bell Labs), selected Mountain View, California, as the new home for his silicon-based semiconductor start-up. He could instead have picked Dallas, Texas, or Los Angeles, as his investor would have preferred, but Shockley was trying to recover from a difficult work environment and a divorce. He needed a change. He also needed to be close to his mother, who still lived in the family's northern California home near Stanford University.

Silicon Valley veterans such as Gordon Moore — a Shockley employee and later a co-founder of both Fairchild Semiconductor and Intel Corporation — say that the semiconductor industry likely would have bubbled up somewhere else were it not for Shockley's decision. He attracted some of the brightest minds in the country to Mountain View and made the then-risky move of picking silicon as the key substrate behind his semiconductor efforts. While Shockley's move proved crucial to Silicon Valley's development, a number of underlying business and cultural factors already had prepared the Valley for its new role and maximized the impact of Shockley's arrival.

It Began With Radio

At the dawn of the 20th century, curious amateurs and entrepreneurs started working with radio and electronics technology. The San Francisco Bay area was a natural locus for this work due to the presence of the U.S. Navy in the area and its desire to use radio communications at sea.

In 1909, one of Stanford University's best-known early graduates, Cyril Elwell, pushed the boundaries of radio communications by setting up what would become the Federal Telegraph Company. This firm built some of that era's largest arc transmitters — devices capable of sending speech over the airwaves in a radius up to 240 kilometers. Within a couple of years of its founding, Federal had crafted for the Navy a chain of arc transmitters linking San Francisco with Hawaii. Meanwhile, the company's laboratory in Palo Alto, California, funded groundbreaking work on the "audion" — a device capable of amplifying electrical signals in a vacuum tube. This technology and its derivatives would help power early computers.

Often plagued by a lack of investment, talent, and infrastructure, these early pioneers were forced to devise novel ways of competing with larger, more established East Coast rivals. Many early Bay Area inventors accordingly concentrated on making lower-cost, higher-quality products or on solving very specific problems. They often found it advantageous to share their ideas with peers and rivals. This openness and appreciation of ingenuity has manifested itself through all of Silicon Valley's major periods of invention.

Companies such as Eitel and McCullough, Litton Engineering Laboratories, and Varian Associates carried on the electronics work in the mid-peninsula. By 1939, their efforts had created conditions sufficiently favorable to entice a pair of Stanford graduates — Bill Hewlett and Dave Packard — to start their own electronics testing equipment company in Palo Alto, at the northern end of the future Silicon Valley and the home of Stanford University.

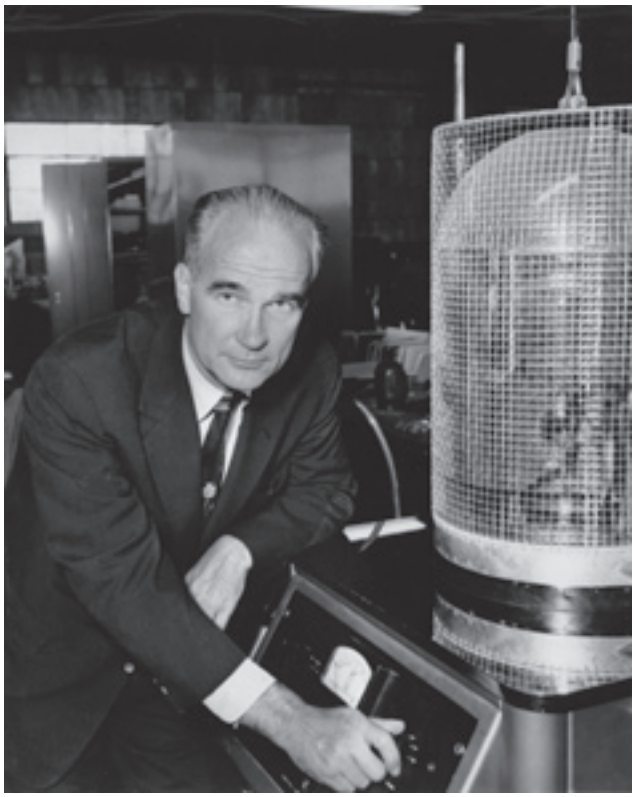

© AP Images

A co-inventor of the transistor, William B. Shockley established his semiconductor start-up in northern California and launched the Silicon Valley as a center of high technology.

Enter Fred Terman

Fred Terman, a strategic-minded Stanford professor and radio researcher, seized on this budding industry and worked to form close ties between his students and the local entrepreneurs. He would introduce the students to local businessmen and arrange internships for them. It was Terman who encouraged Hewlett and Packard to launch their business.

In many ways, Terman pioneered this model of linking a prominent university with local businesses. His efforts helped make it possible for brainy Stanford students to find jobs and a future in the area rather than scampering off to more established companies in the Midwest and on the East Coast. Terman similarly helped woo William Shockley to the Valley of Heart's Delight, promising him a flow of top-notch students eager to work with, and learn from, a leading physicist.

Shockley's ability to attract some of the nation's brightest young scientists to Silicon Valley proved hugely important in shaping the region's future development. Ultimately, however, his unorthodox if grating management style proved his most lasting contribution. Unwilling to deal with Shockley's mood swings and lack of business acumen, eight of his top employees broke off from the lab to form a new company.

The "traitorous eight," as Shockley described them, lucked out by attracting the attention of Arthur Rock, an East Coast investor. Rock arranged an unusual deal for the time. He convinced an established company, Fairchild Camera and Instrument, to take on the entire group of ex-Shockley employees to staff a new subsidiary known as Fairchild Semiconductor. Significantly, the employees were all given large ownership stakes in the new company. This model, combining venture capital and employee ownership, would prove to be a foundation of the Valley's future development and growth.

The "Fairchildren": Spreading the Culture of Innovation

Even as Fairchild Semiconductor strengthened Silicon Valley's leading role in the semiconductor industry, the company soon fostered another Valley custom. When many Fairchild researchers decided the company did not move fast enough to make use of their ideas, they broke off to form their own semiconductor start-ups — often referred to as the "Fairchildren."

The staggering number (and in many cases the success) of these start-ups gave rise to the notion that it was okay to jump ship from a company to pursue one's own ideas. It was also acceptable to bounce from company to company in search of the next big thing. These concepts were new and unique; in other parts of the United States, employees were expected to stay with one firm throughout their careers.

Following this trend, two of the Fairchild Semiconductor co-founders, Robert Noyce and Gordon Moore, left the company in 1968 to form Intel. In just a few short years, Intel would produce the first true microprocessor.

Over time, the bustling semiconductor industry attracted people who wanted to make use of this new technology. Once again, local enthusiasts began experimenting with microprocessors to see what types of machines they could build. Silicon Valley turned into an unstoppable force of innovation.

Researchers at a pair of labs — Xerox PARC and SRI (Stanford Research Institute) — began developing many of the ideas that would form the basis of the computing

revolution. Often these centers proved willing to share their innovations with others in the Silicon Valley community. Inventions such as the mouse, the graphical user interface, and Ethernet made their way into the hands of local entrepreneurs in this fashion. Apple, Cisco, and Sun Microsystems, for instance, all can all trace their roots to Xerox PARC.

Once again, the open exchange of ideas led to Silicon Valley's business success. Apple Computer founder Steve Jobs, for example, hired away some of Xerox PARC's personal computer designers for his company's own projects, while Sun co-founder Andy Bechtolsheim used the same PARC machine and Ethernet networking technology as the inspiration for his company's first server.

In the years to come, growing numbers of entrepreneurs would, in turn, build off this work. Stanford students, in particular, demonstrated a knack for tapping into technology trends, with the likes of Yahoo! and Google beginning as dorm room concepts.

The sheer volume of innovation and technology giants tied to Silicon Valley seems almost difficult to comprehend. San Francisco, for example, birthed television via the work of Philo Farnsworth, and the biotech industry through Genentech. The greater Silicon Valley region gave rise to giants such as Intel, HP, Cisco, Sun, Oracle, Electronic Arts, SGI, Yahoo!, eBay, Google, and AMD.

© AP Images/HO

Hewlett-Packard co-founder David Packard testing an HP 205A signal generator in the late 1930s–early 1940s. Packard and William Hewlett founded their company in 1938 with a borrowed $538, and ran it from the garage depicted on the front cover of this eJournal.

Ingredients for Success

These success stories were the result of the Valley's peculiar character, which prizes innovation and the flow of information among entrepreneurs. Technology companies, like their counterparts in other areas, understandably wish to maintain the firmest possible grip over their intellectual property. They hope to control, market, and profit from their innovations.

But many in Silicon Valley also understand that one of their most important assets is the Valley's long and deep roots as almost a massive club for sharing new ideas. Enthusiasts push each other to come up with something new and better. Employees shift from company to company bringing with them concepts that can be tweaked to create a fresh invention. These same employees travel down Silicon Valley's Sand Hill Road, presenting their ideas to one venture capitalist after another, seeding the minds of the Valley's influential players with notions around the directions in which technology is traveling.

Through all of this, people in the Valley accept that failure is part of the bargain. Rather than being ashamed of a string of busted start-ups, one wears those experiences as a badge of honor — and knows he or she is meant to keep on going until the "big ones" hit. And perhaps this spirit dates back to the California Gold Rush of 1849, that spasm of individual risk-taking and drive that similarly placed its unique stamp on the region's psyche.

It's this rich mix of intertwining forces that makes Silicon Valley so difficult to copy. People endure the high housing prices and demanding nature of their jobs because they feel that the same work cannot be accomplished anywhere else. There is almost a sense that one is living inside a trade show — a very sunny one at that — where everything you need to charge after an inspiration or an idea is at your fingertips: the technology, the funding, and, of course, the talent.

Silicon Valley certainly faces competitive pressures. Various regions around the world possess ample talent and capital and a determination to improve their technological acumen. But the interplay of cultural and business forces that helped shape Silicon Valley remains vibrant, and should continue to secure the region's place as an unequaled technology powerhouse. ■

The opinions expressed in this article do not necessarily reflect the views or policies of the U.S. government.

The Rise of the Creative Class

Richard Florida

© AP Images/Gene J. Puskar

Carnegie Mellon University scientists test a soccer-playing robot built from a Segway personal transportation device (unmodified Segway at left).

American prosperity and personal success increasingly depend upon young workers and others who display creativity, individuality, difference, and merit.

Richard Florida is professor of business and creativity at the Rotman School of Management, University of Toronto, where he is also academic director of the Lloyd and Delphine Martin Prosperity Institute. He is the author most recently of Who's Your City? *This essay is an excerpt from his article "The Rise of the Creative Class," which originally appeared in* Washington Monthly *magazine.*

Note: Each year, businesses large and small "recruit" on university campuses, especially those with the best reputations (such as Carnegie Mellon), sending employees to meet and attempt to hire students. Often the most sought-after students do not fit the expected stereotype of those with the highest grades or those who come to interviews in the nicest suits, but instead are those who have shown the greatest creativity.

As I walked across the campus of Pittsburgh's Carnegie Mellon University one delightful spring day, I came upon a table filled with young people chatting and enjoying the spectacular weather. Several had identical blue T-shirts with "Trilogy@CMU" written across them — Trilogy being an Austin, Texas-based software company with a reputation for recruiting our top students. I walked over to the table. "Are you guys here to recruit?" I asked. "No, absolutely not," they replied adamantly. "We're not recruiters. We're just hangin' out, playing a little Frisbee with our friends." How interesting, I thought. They've come to campus on a workday, all the way from Austin, just to hang out with some new friends.

I noticed one member of the group sitting slouched over on the grass, dressed in a tank top. This young man had spiked multicolored hair, full-body tattoos, and multiple piercings in his ears. An obvious slacker, I thought, probably in a band. "So what is your story?" I asked. "Hey man, I just signed on with these guys." In

fact, as I would later learn, he was a gifted student who had inked the highest-paying deal of any graduating student in the history of his department, right at that table on the grass, with the recruiters who do not "recruit."

What a change from my own college days, just a little more than 20 years ago, when students would put on their dressiest clothes and carefully hide any counterculture tendencies to prove that they could fit in with the company. Today, apparently, it's the company trying to fit in with the students. In fact, Trilogy had wined and dined him over margarita parties in Pittsburgh and flown him to Austin for private parties in hip nightspots and aboard company boats. When I called the people who had recruited him to ask why, they answered, "That's easy. We wanted him because he's a rock star."

While I was interested in the change in corporate recruiting strategy, something even bigger struck me. Here was another example of a talented young person leaving Pittsburgh. … I asked the young man with the spiked hair why he was going to a smaller city in the middle of Texas, a place with a small airport and no professional sports teams, without a major symphony, ballet, opera, or art museum comparable to Pittsburgh's. The company is excellent, he told me. There are also terrific people and the work is challenging. But the clincher, he said, is that "it's in Austin!" There are lots of young people, he went on to explain, and a tremendous amount to do: a thriving music scene, ethnic and cultural diversity, fabulous outdoor recreation, and great nightlife. Though he had several good job offers from Pittsburgh high-tech firms and knew the city well, he said he felt the city lacked the lifestyle options, cultural diversity, and tolerant attitude that would make it attractive to him. As he summed it up: "How would I fit in here?"

This young man and his lifestyle proclivities represent a profound new force in the economy and life of the United States. He is a member of what I call the creative class: a fast-growing, highly educated, and well-paid segment of the workforce on whose efforts corporate profits and economic growth increasingly depend. Members of the creative class do a wide variety of work in a wide variety of industries — from technology to entertainment, journalism to finance, high-end manufacturing to the arts. They do not consciously think of themselves as a class. Yet they share a common ethos that values creativity, individuality, difference, and merit.

The Creative Secretary

The distinguishing characteristic of the creative class is that its members engage in work whose function is to "create meaningful new forms." The super-creative core of this new class includes scientists and engineers, university professors, poets and novelists, artists, entertainers, actors, designers, and architects, as well as the "thought leadership" of modern society: nonfiction writers, editors, cultural figures, think-tank researchers, analysts, and other opinion-makers. Members of this super-creative core produce new forms or designs that are readily transferable and broadly useful — such as designing a product that can be widely made, sold, and used; coming up with a theorem or strategy that can be applied in many cases; or composing music that can be performed again and again.

Beyond this core group, the creative class also includes "creative professionals" who work in a wide range of knowledge-intensive industries such as high-tech sectors, financial services, the legal and health care professions, and business management. These people engage in creative problem-solving, drawing on complex bodies of knowledge to solve specific problems. Doing so typically requires a high degree of formal education and thus a high level of human capital. People who do this kind of work may sometimes come up with methods or products that turn out to be widely useful, but it's not part of the basic job description. What they are required to do regularly is think on their own. They apply or combine standard approaches in unique ways to fit the situation, exercise a great deal of judgment, perhaps try something radically new from time to time.

Much the same is true of the growing number of technicians and others who apply complex bodies of knowledge to working with physical materials. In fields such as medicine and scientific research, technicians are taking on increased responsibility to interpret their work and make decisions, blurring the old distinction between white-collar work (done by decision makers) and blue-collar work (done by those who follow orders). They acquire their own arcane bodies of knowledge and develop their own unique ways of doing the job. Another example is the secretary in today's pared-down offices. In many cases this person not only takes on a host of tasks once performed by a large secretarial staff, but becomes a true office manager — channeling flows of information, devising and setting up new systems, often making key decisions on the fly. These people contribute more than

© Jupiter Images

But will he make it to Austin? A college student manipulates information on his laptop computer.

intelligence or computer skills. They add creative value. Everywhere we look, creativity is increasingly valued. Firms and organizations value it for the results that it can produce, and individuals value it as a route to self-expression and job satisfaction. Bottom line: As creativity becomes more valued, the creative class grows.

The creative class now includes some 38.3 million Americans, roughly 30 percent of the entire U.S. workforce — up from just 10 percent at the turn of the 20th century and less than 20 percent as recently as 1980. The creative class has considerable economic power. In 1999, the average salary for a member of the creative class was nearly $50,000 ($48,752), compared to roughly $28,000 for a working-class member and $22,000 for a service-class worker.

Not surprisingly, regions that have large numbers of creative class members are also some of the most affluent and growing. ■

The opinions expressed in this article do not necessarily reflect the views or policies of the U.S. government.

By the Numbers

Amount of venture capital investment (first quarter 2008)	$7.1 billion
Leading venture capital recipient industries	1. Biotechnology 2. Software 3. Medical Devices and Equipment
U.S. regions receiving most venture capital investment	1. Silicon Valley 2. New England 3. New York Metropolitan
Average and median age of U.S.-born tech founders when they started their companies	39
Percentage of start-ups nationwide founded by immigrants	25.6%
Percentage of Silicon Valley start-ups founded by immigrants	52.3%
Top five universities from which U.S.-born tech founders received their highest degrees	1. Harvard 2. Mass. Institute of Technology (MIT) 3. Pennsylvania State University 4. Stanford 5. University of California – Berkeley
Percentage of U.S.-born high-tech founders holding bachelor's degree as terminal (highest) degree	44%
Number of individuals employed in U.S. science and engineering labor force, 1950	< 200,000
Number of individuals employed in U.S. science and engineering labor force, 2000	Approximately 4,800,000
Leading median salary increases (1993–2003) for recent bachelor's degree recipients	1. Computer and Mathematical Sciences (23.3 %) 2. Engineering (20.4%)
Increase in research and development (R&D) employment within the United States by U.S. firms (1994–2004)	31%
Increase by same firms outside the United States (1994–2004)	76%
Foreign-born percentage of all college-educated workers in science and engineering occupations (U.S., 2003)	25%

Sources: Kauffman Foundation; PricewaterhouseCoopers; National Science Foundation

Internet Resources

Online sources for additional information about technology start-ups

Bizworld
A Web site for teaching children the basics of business, entrepreneurship, and money management and for promoting teamwork and leadership in the classroom.
http://www.bizworld.org/index.html

Corante
A collection of blogs and technology news postings that cover biotechnology, communications, e-business, the Internet, law, personal technology, venture capital, and more.
http://www.corante.com/

DealBook
Financial news and analysis covering mergers and acquisitions, investment banking, initial public offerings, private equity, hedge funds, venture capital, legal matters, and related topics from the *New York Times*.
http://dealbook.blogs.nytimes.com/

The Encyclopedia of Private Equity and Venture Capital
A resource of VC Experts for private equity and venture capital educational and reference material.
www.vcexperts.com

Money Tree Survey
A PricewaterhouseCoopers Web site that offers information on emerging companies that receive financing, and the venture capital firms that provide it.
http://www.pwcmoneytree.com/

National Venture Capital Association
A trade association that represents the U.S. venture capital industry.
http://www.nvca.org/

San Jose Mercury News — Venture Capital
News from the Silicon Valley's newspaper of record.
http://www.mercurynews.com/vc

Science and Technology Entrepreneurship Program — Case Western Reserve University
Offers degrees in graduate-level science, business, and innovation.
http://step.case.edu

Startup Search
A directory tracking "facts and figures about new Web products, start-up companies, key start-up employees, and the funding dollars powering their growth."
http://www.startupsearch.org/

TechCrunch
An influential blog about Silicon Valley.
http://www.techcrunch.com/

Articles, Books, and Studies

Anderson, Stuart, and Michaela Platzer. *American Made: The Impact of Immigrant Entrepreneurs and Professionals on U.S. Competitiveness.* National Venture Capital Association (November 2006).
www.nvca.org/pdf/AmericanMade_study.pdf.

Ante, Spencer E. *Creative Capital: Georges Doriot and the Birth of Venture Capital.* Harvard Business School Press (2008).

Augustine, Norman. "The Future of U.S. Competitiveness." The Brookings Institution (5 October 2006): transcript p. 7.
www3.brookings.edu/comm/events/20061005.pdf

Committee on Prospering in the Global Economy of the 21st Century. *Rising Above the Gathering Storm: Energizing and Employing America for a Brighter Economic Future.* National Academies Press (2005).
www.nap.edu/catalog.php?record_id=11463

Galama, Titus, and James Hosek, eds. *Perspectives on U.S. Competitiveness in Science and Technology*. RAND Corporation (2007).
www.rand.org/pubs/conf_proceedings/2007/RAND_CF235.pdf

Pink, Daniel H. "Revenge of the Right Brain." *Wired* (February 2005).
http://www.wired.com/wired/archive/13.02/brain.html

Wadhwa, Vivek. "Keeping Research and Leadership at Home." *BusinessWeek Online* (18 January 2007).
www.businessweek.com/print/smallbiz/content/jan2007/sb20070118_135378.htm

---

The U.S. Department of State assumes no responsibility for the content and availability of the resources from other agencies and organizations listed above. All Internet links were active as of April 2008.

New home of eJOURNALUSA

http://www.america.gov

A MONTHLY JOURNAL OFFERED IN MULTIPLE LANGUAGES